TILT / LIGHTING TECHNOLOGY

10” LED LINEAR PANELS

INDUSTRY-LEADING 7 YEAR WARRANTY

PROJECT

TYPE | PART#

PRODUCT FEATURES

- Plug & Play 24 Volt design for quick install and design flexibility
- Constant voltage design allows multiple lights per driver and greater energy efficiency
- Dimmable (0-10V or PWM)
- Polycarbonate diffuser will not shatter, sag or yellow
- 100% acrylic light guide panel for color stability
- Edge-lit design for ultra thin profile (3/8”)
- Wide 120° beam angle for better spacing
- Lights can be located up to 50’ from driver
- IP44 rating for damp or dry locations
- IC rating permits contact with insulation
- Rated for over 50,000 hours LM-70
- Panels may be grid, flush, surface mounted or suspended
- Install with TILT® Drivers and Wired Components

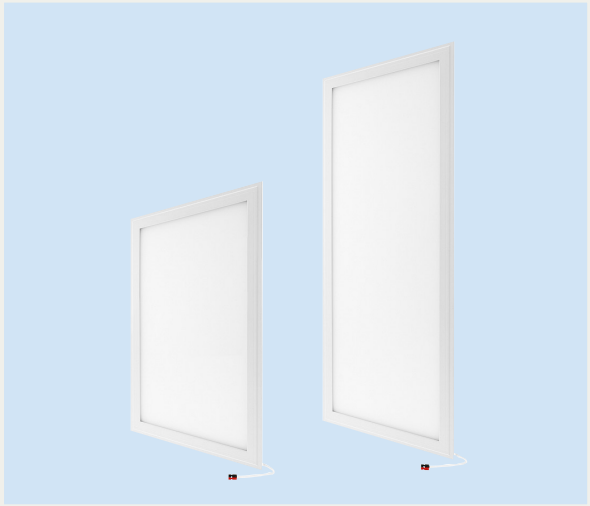

PART NUMBER & PRODUCT GUIDE (10” LED LINEAR PANELS)

Grid Mount Part#	Flush Mount Part#	Description	Color Temp	CRI	R9	Lumens	AC Watts	DC Watts	L/W-DC
LGMSS30W-1024-HE*	LFMSS30W-1024-HE*	10”X24” LED Linear	3000K	>80	>5	1950	21	18	108
LGMSS35W-1024-HE*	LFMSS35W-1024-HE*	10”X24” LED Linear	3500K	>80	>5	1975	21	18	109
LGMSS40W-1024-HE*	LFMSS40W-1024-HE*	10”X24” LED Linear	4000K	>80	>5	2000	21	18	111
LGMSS50W-1024-HE*	LFMSS50W-1024-HE*	10”X24” LED Linear	5000K	>80	>5	2025	21	18	112
LGMSS30W-1024-CQ*	LFMSS30W-1024-CQ*	10”X24” LED Linear	3000K	>90	>50	1550	21	18	86
LGMSS35W-1024-CQ*	LFMSS35W-1024-CQ*	10”X24” LED Linear	3500K	>90	>50	1600	21	18	89
LGMSS40W-1024-CQ*	LFMSS40W-1024-CQ*	10”X24” LED Linear	4000K	>90	>50	1650	21	18	92
LGMSS50W-1024-CQ*	LFMSS50W-1024-CQ*	10”X24” LED Linear	5000K	>90	>50	1700	21	18	95
LGMSS30W-1048-HE*	LFMSS30W-1048-HE*	10”X48” LED Linear	3000K	>80	>5	4050	40	36	113
LGMSS35W-1048-HE*	LFMSS35W-1048-HE*	10”X48” LED Linear	3500K	>80	>5	4125	40	36	114
LGMSS40W-1048-HE*	LFMSS40W-1048-HE*	10”X48” LED Linear	4000K	>80	>5	4175	40	36	116
LGMSS50W-1048-HE*	LFMSS50W-1048-HE*	10”X48” LED Linear	5000K	>80	>5	4250	40	36	118
LGMSS30W-1048-CQ*	LFMSS30W-1048-CQ*	10”X48” LED Linear	3000K	>90	>50	3600	40	36	100
LGMSS35W-1048-CQ*	LFMSS35W-1048-CQ*	10”X48” LED Linear	3500K	>90	>50	3650	40	36	101
LGMSS40W-1048-CQ*	LFMSS40W-1048-CQ*	10”X48” LED Linear	4000K	>90	>50	3700	40	36	102
LGMSS50W-1048-CQ*	LFMSS50W-1048-CQ*	10”X48” LED Linear	5000K	>90	>50	3750	40	36	104

- HE Model is designed to provide a balance of light quality and energy efficiency.
- CQ Model is designed to provide high color rendering with a more complete spectral distribution.
- For surface mount application: Use Grid Mount product with surface mount accessory.

*This model may have minimum order quantity required and additional lead time. Contact Lauren Illumination for details.

LAUREN ILLUMINATION

Lauren Illumination® and TILT® are registered trademarks of Lauren Illumination LLC
1101 Commercial Ave. SE I New Philadelphia, OH 44663 I P: 855.440.8458 I F: 330.440.6607
laurenillumination.com

©2010-2019 LAUREN ILLUMINATION, LLC. ALL RIGHTS RESERVED. CREATED 11/19

10” LED LINEAR PANELS

SPECIFICATION SHEET

DRIVER SPECIFICATIONS

Part #	Size (WxLxD)	AC Input	DC Output	Working Temp	Max Lights/Driver (HE Model*) 10 x 24	10 x 48
LD16	3.0” x 12.0” x 1.5”	90 - 305V	24V / 16W	-35~70C	0	0
LD25	3.0” x 12.0” x 1.5”	90 - 305V	24V / 25W	-35~70C	1	0
LD40	3.0” x 12.0” x 1.5”	90 - 305V	24V / 40W	-40~70C	2	1
LD60	3.0” x 12.0” x 1.5”	90 - 305V	24V / 60W	-40~70C	3	1
LD90	3.0” x 12.0” x 1.5”	90 - 305V	24V / 90W	-40~70C	5	2
LD100P	2.6” x 14.0” x 1.6”	90 - 305V	24V / 100W	-40~60C	5	2

DIMENSIONAL DATA

GRID MOUNT

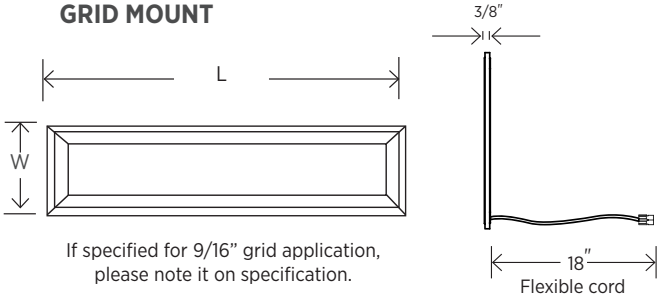

If specified for 9/16” grid application, please note it on specification.

FLUSH MOUNT

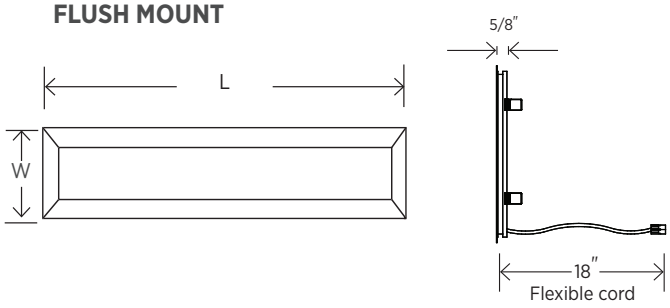

Product	Length	Width	Depth	Cut Out (Flush Mount Only)	Weight (lbs)
8”x 24”	23 3/4”	9 3/4”	3/8”	23 1/4”x 9 1/2”	4.0
8”x 48”	47 3/4”	9 3/4”	3/8”	47 1/4”x 9 1/2”	8.0

PHOTOMETRIC DATA

Photometry

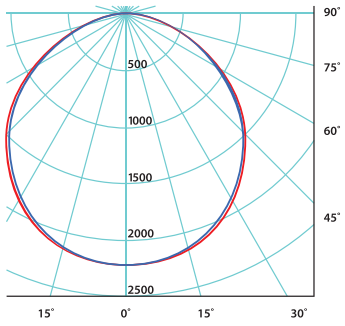

Zonal Lumen Summary (LGMSS35W-1048-HE Model*)

Degrees	%	Lumens
0-30	28	1155
0-40	46	1898
0-60	80	3300
0-90	100	4125
90-180	0	0
0-180	100	4125

*CQ Model may vary from HE Model. Contact Lauren Illumination.

RoHS CE UL CERTIFIED SAFETY US-CA E357470 EMerge ALLIANCE MEMBER PARTICIPATING

LAUREN ILLUMINATION

Lauren Illumination® and TILT® are registered trademarks of Lauren Illumination LLC
1101 Commercial Ave. SE I New Philadelphia, OH 44663 I P: 855.440.8458 I F: 330.440.6607
laurenillumination.com

©2010-2019 LAUREN ILLUMINATION, LLC. ALL RIGHTS RESERVED. CREATED 11/19